SEKTION

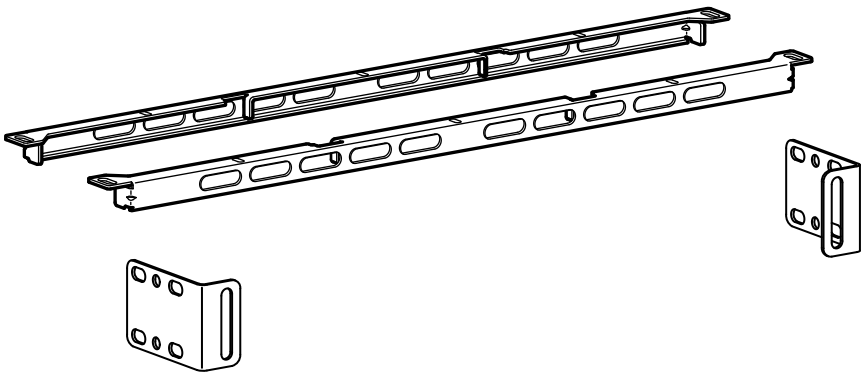

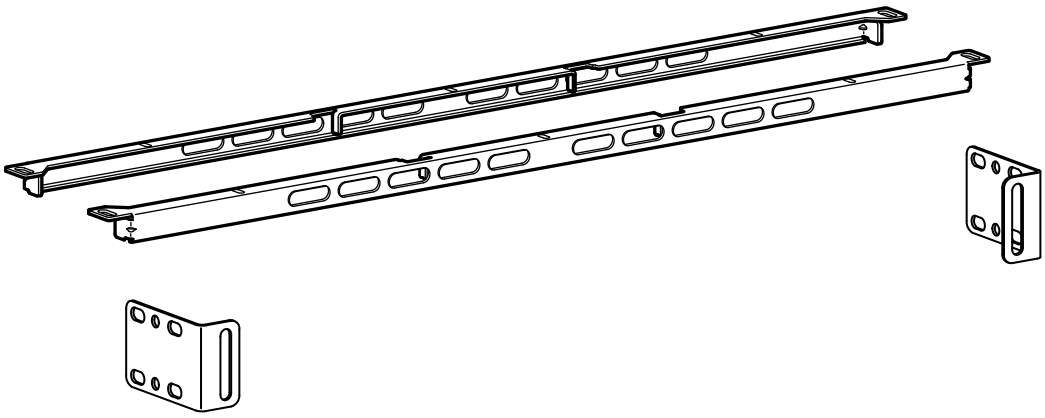

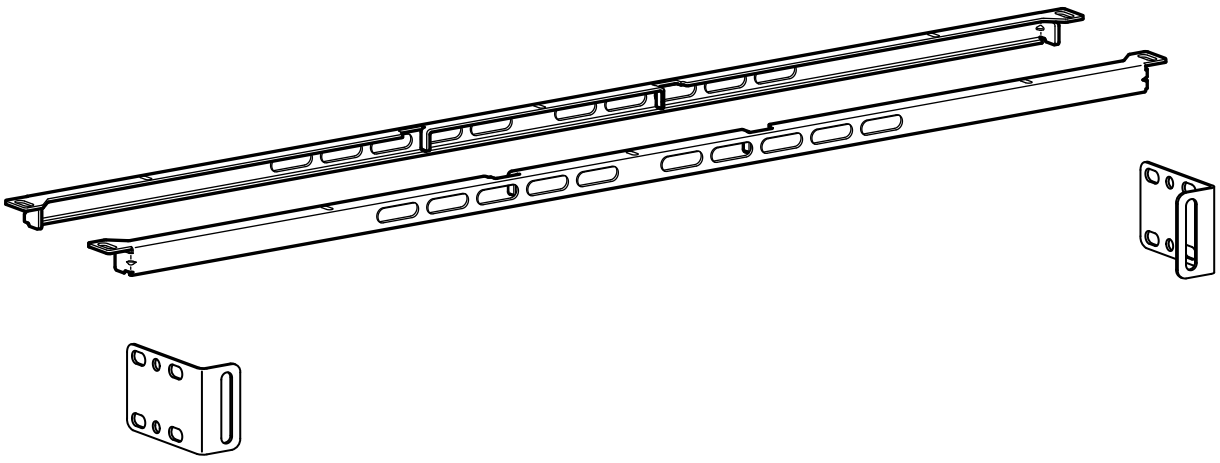

Design and Quality
IKEA of Sweden

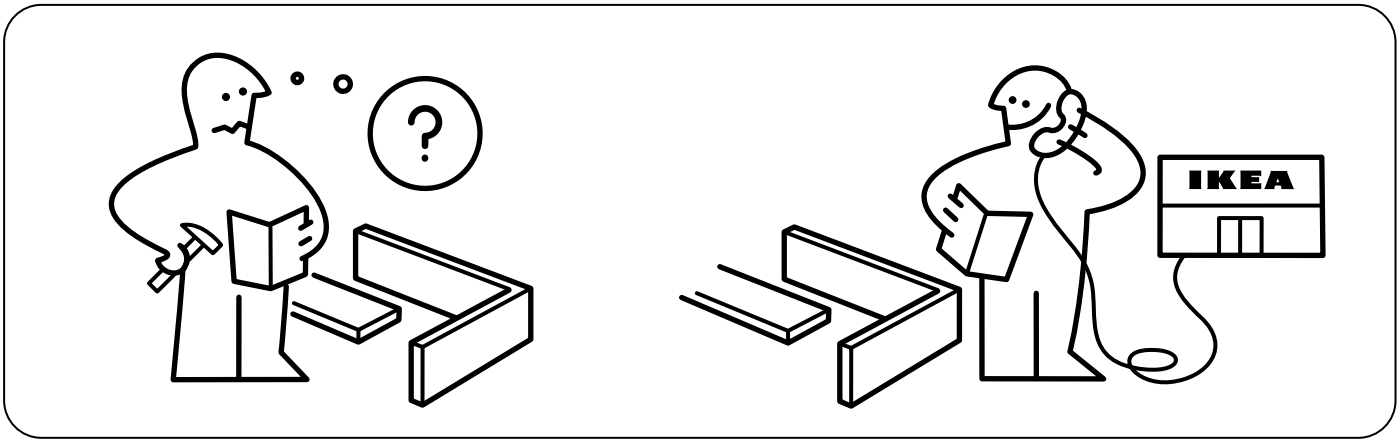
IKEA

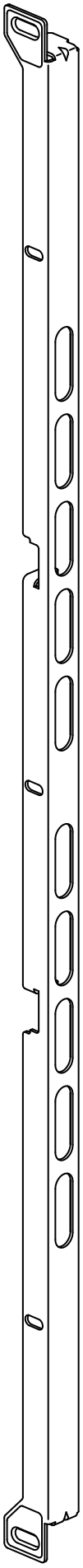

139423
139424
139425

2x

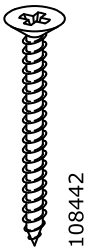

108442

4x

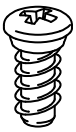

100344

12x

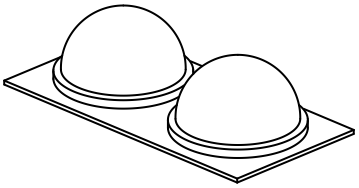

109398

1x

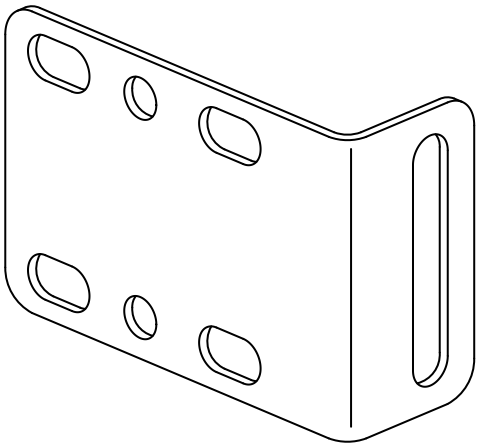

139168

2x

1

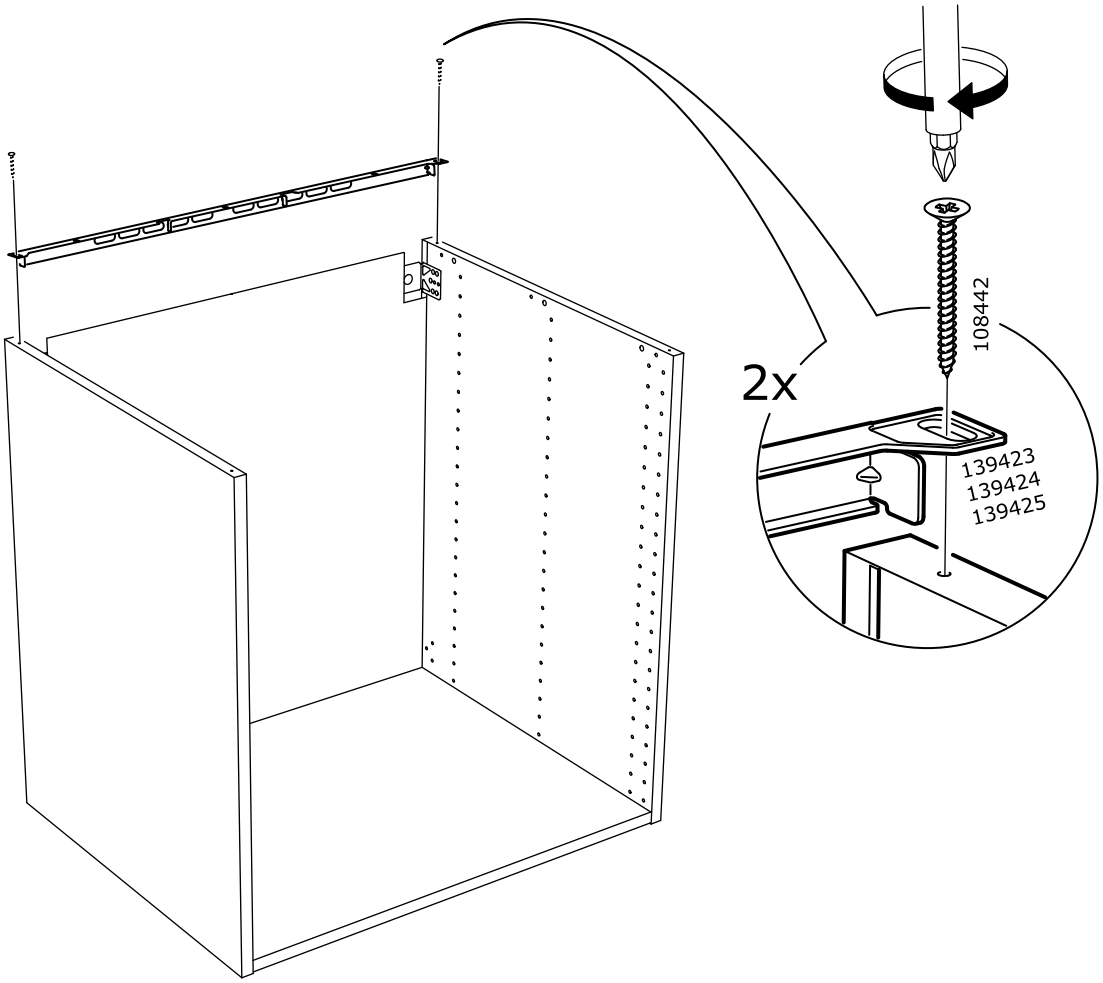

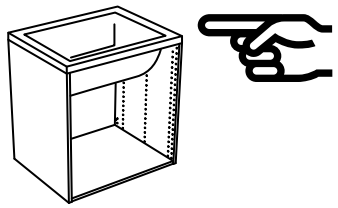

2

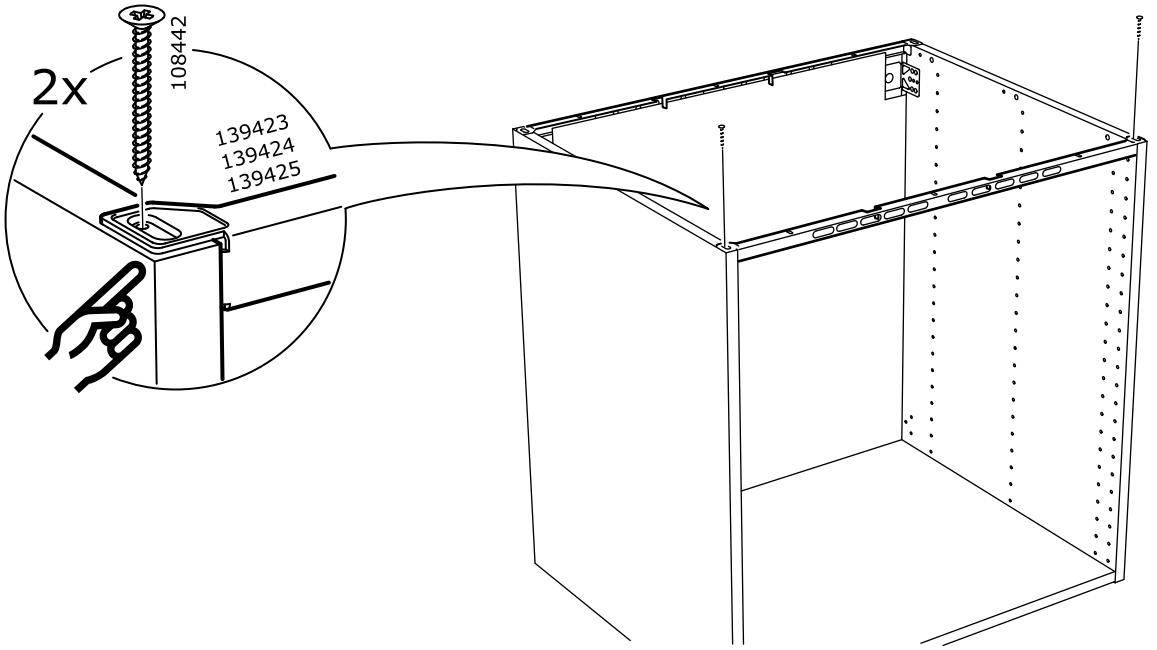
2x
108442
139423
139424
139425

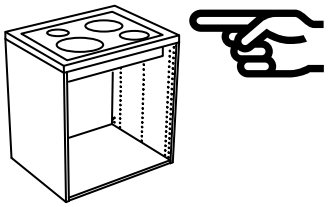

2

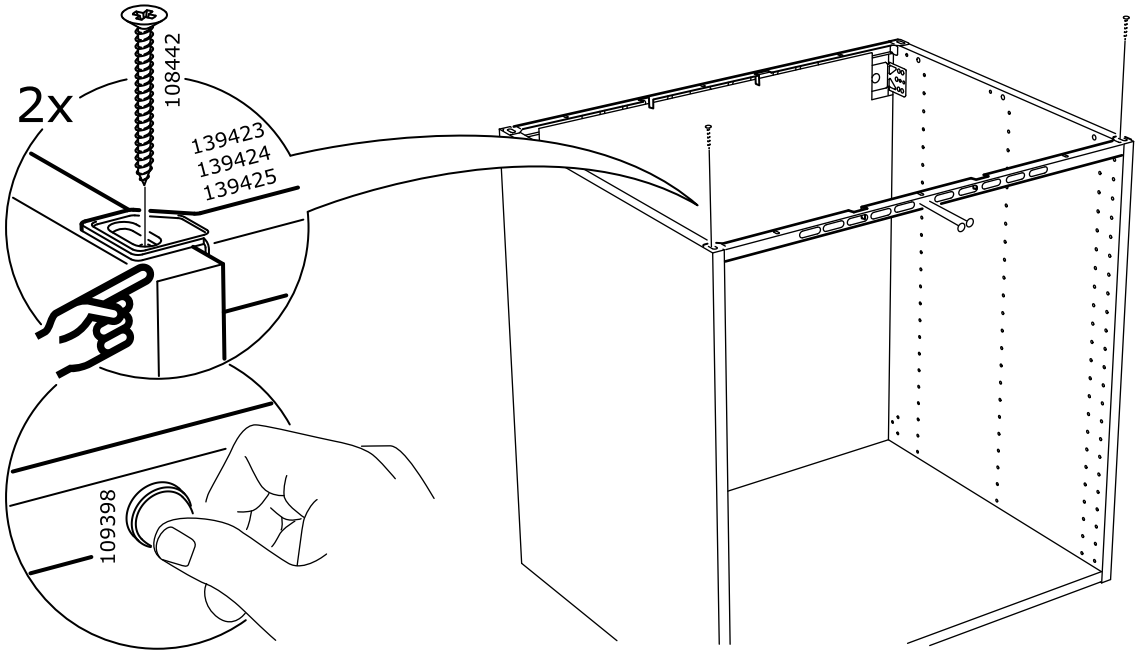
2x
108442
139423
139424
139425
109398

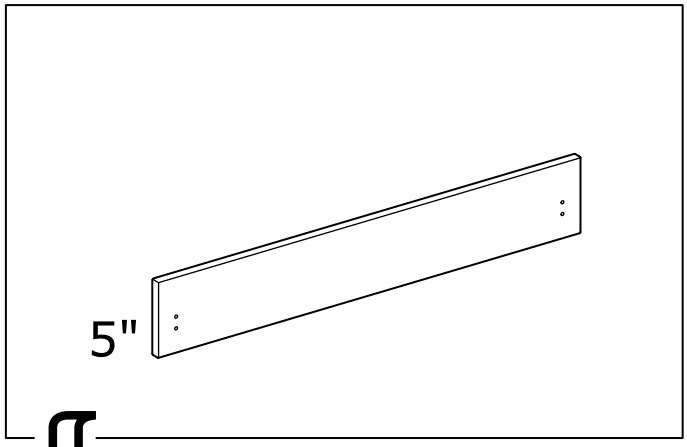

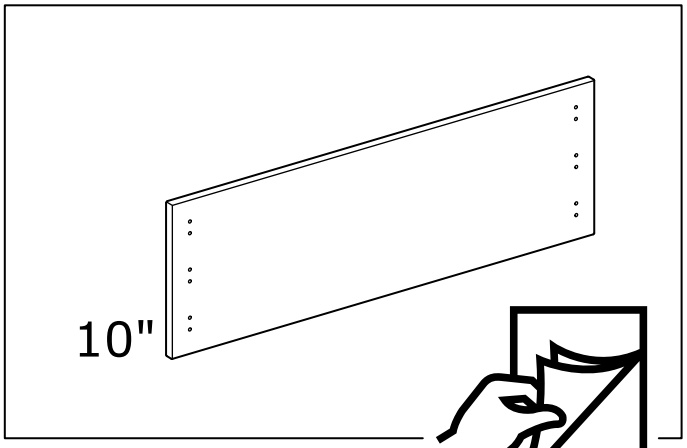

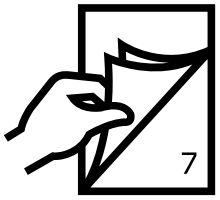

3

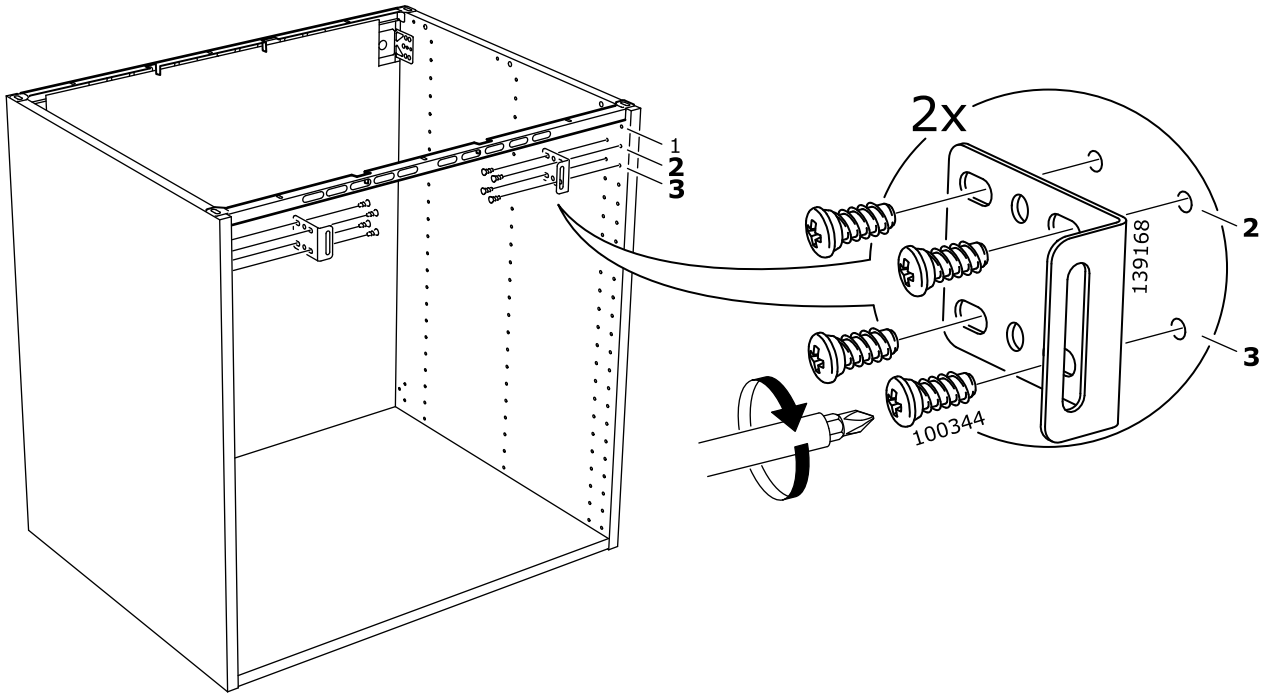

4

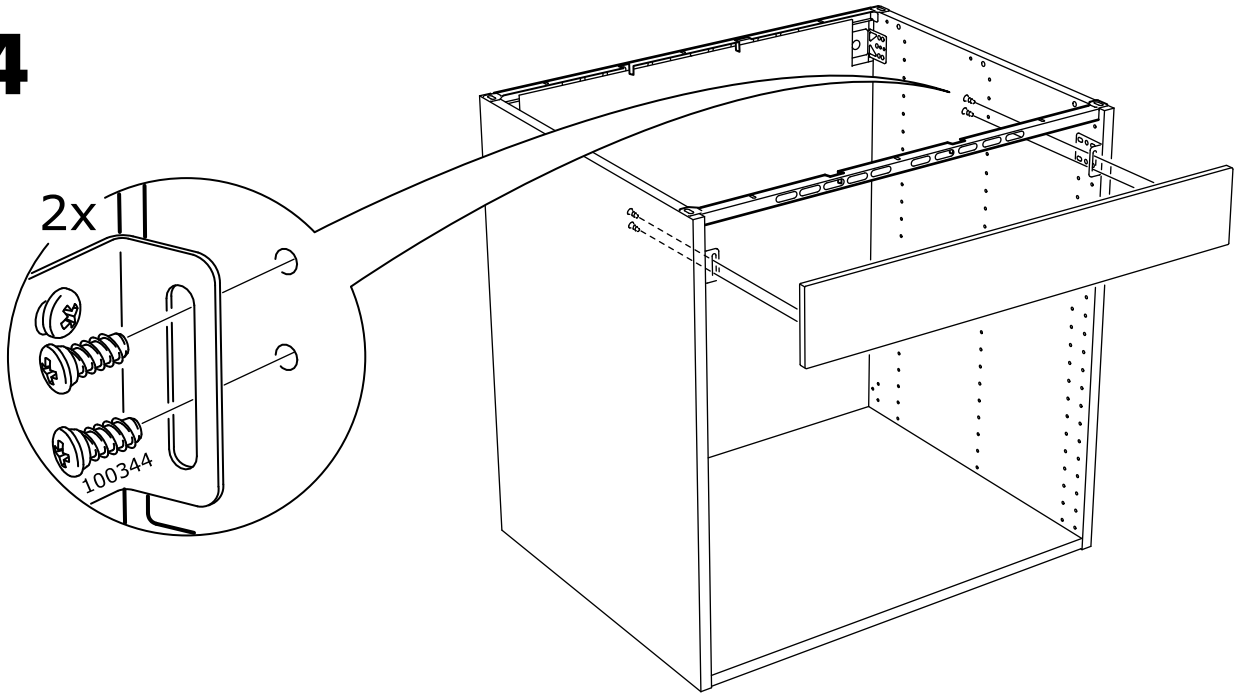

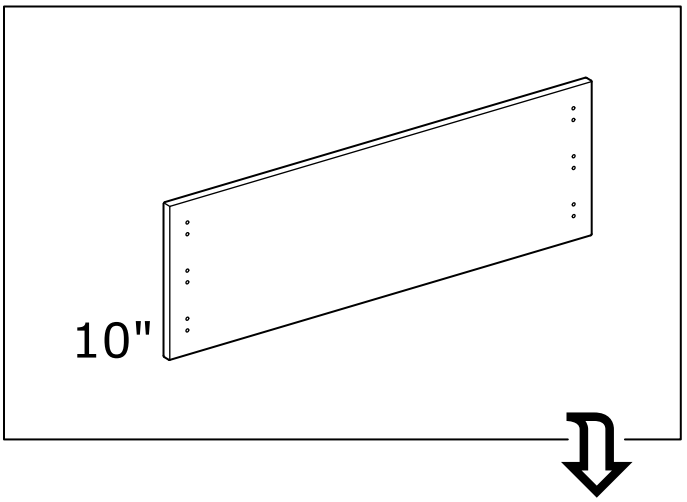

3

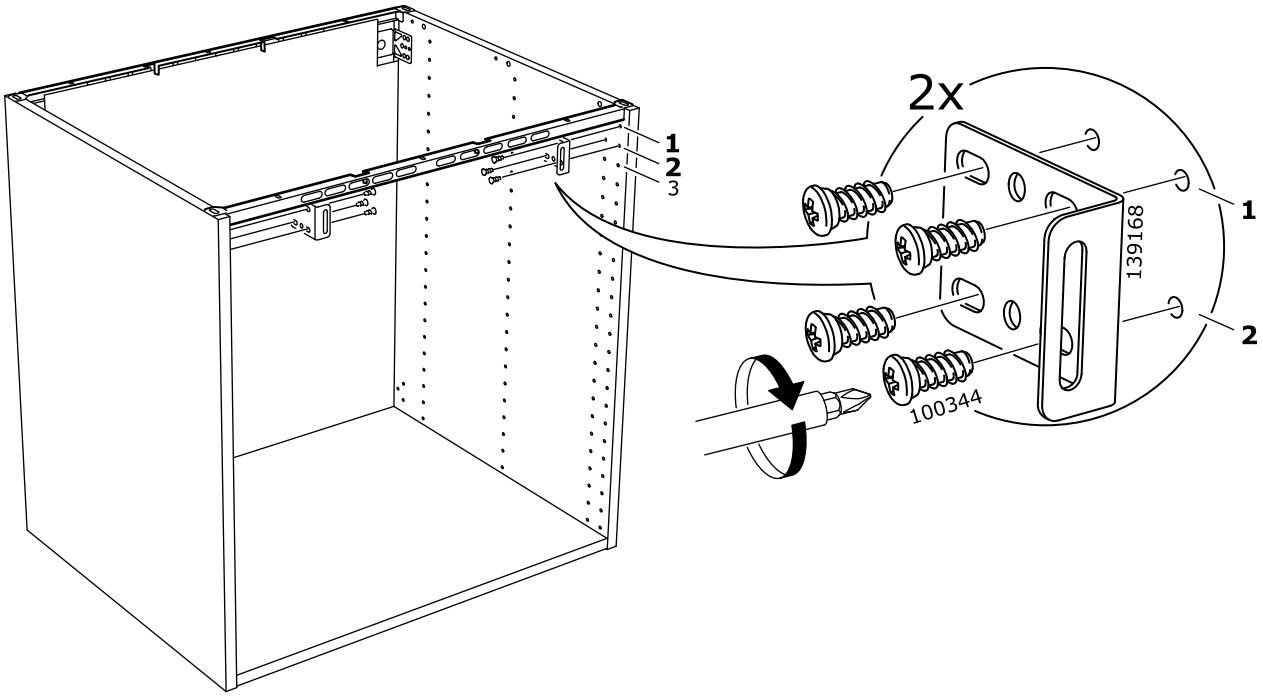

4

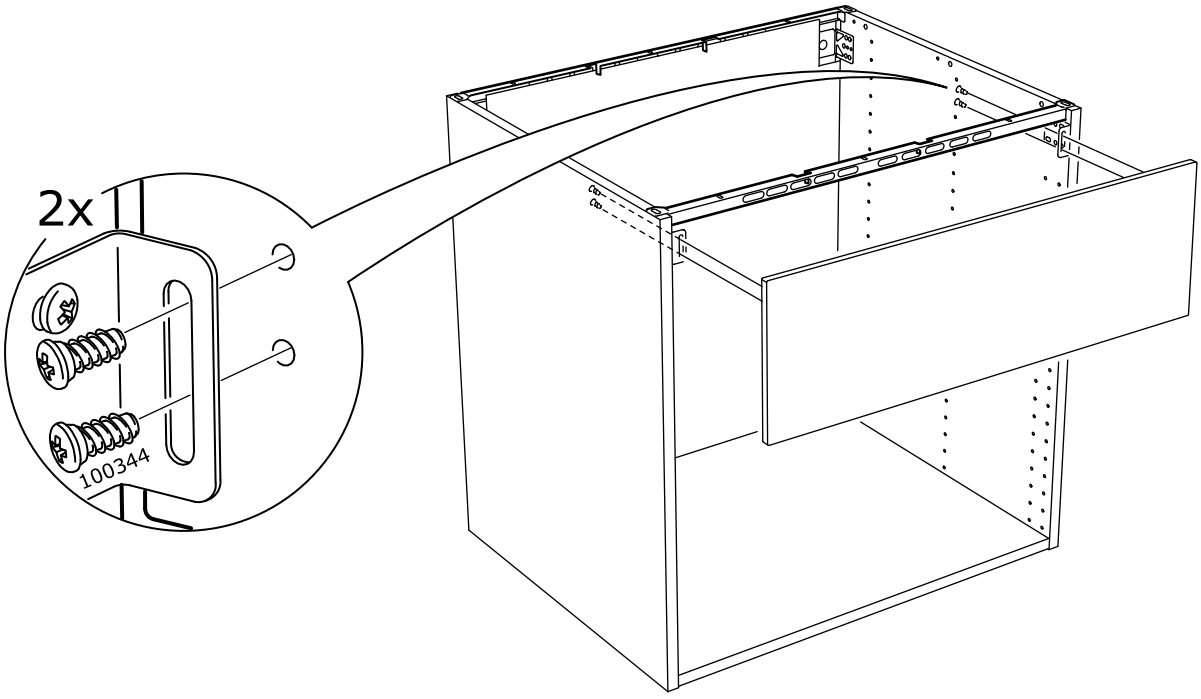

© Inter IKEA Systems B.V. 2013