ASKHOLMEN

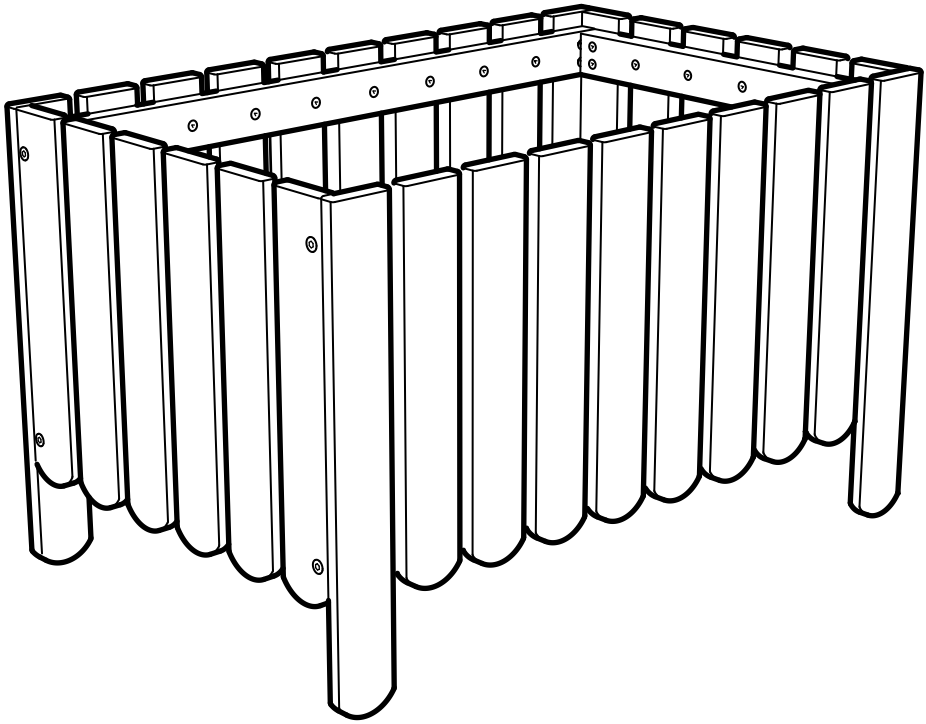

Design and Quality
IKEA of Sweden

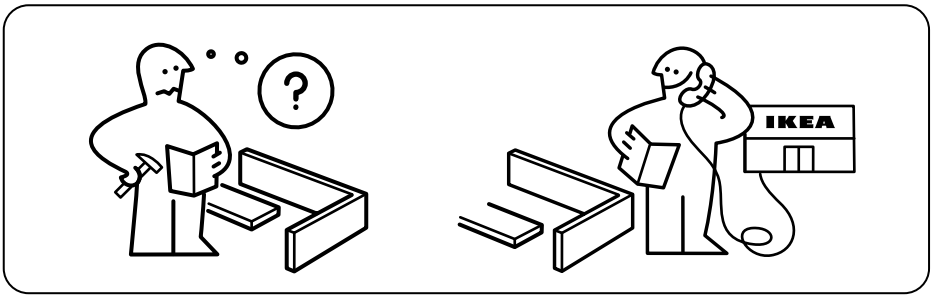

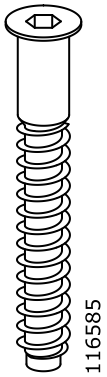

8x

4x

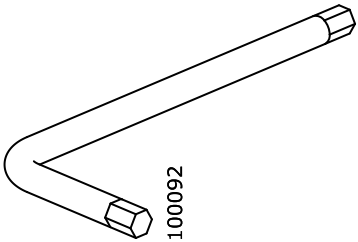

1x

1

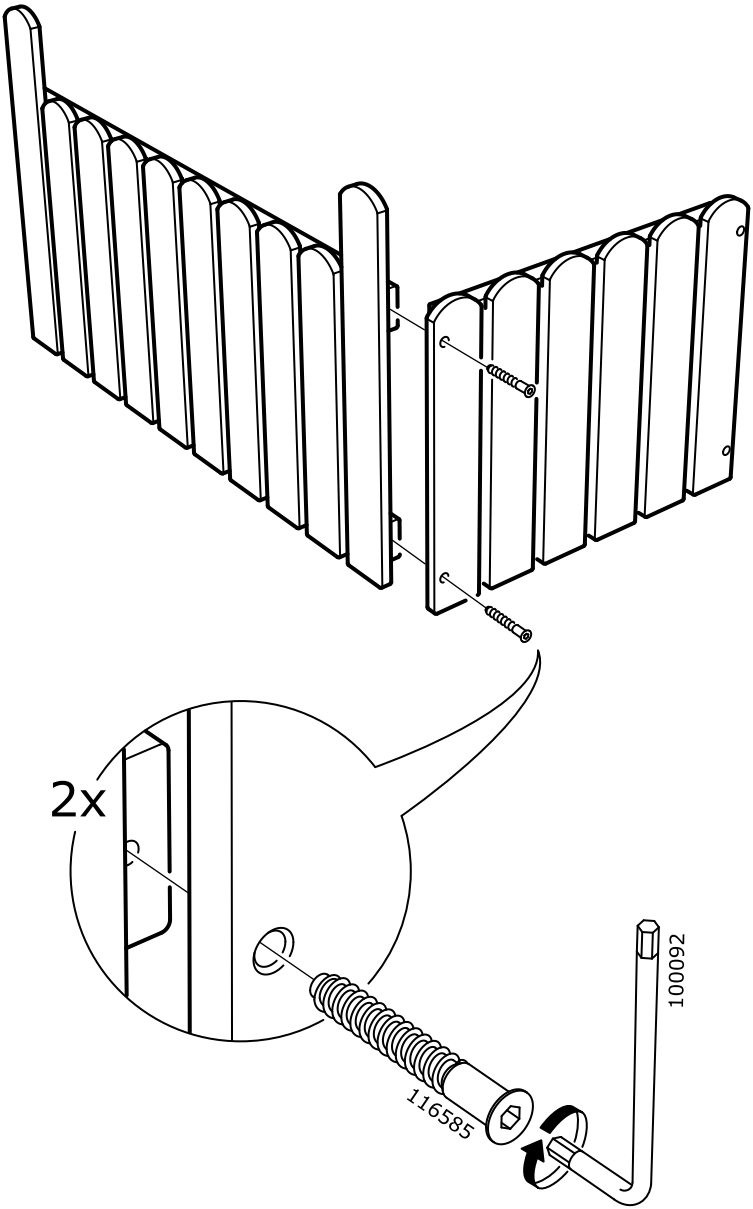

2

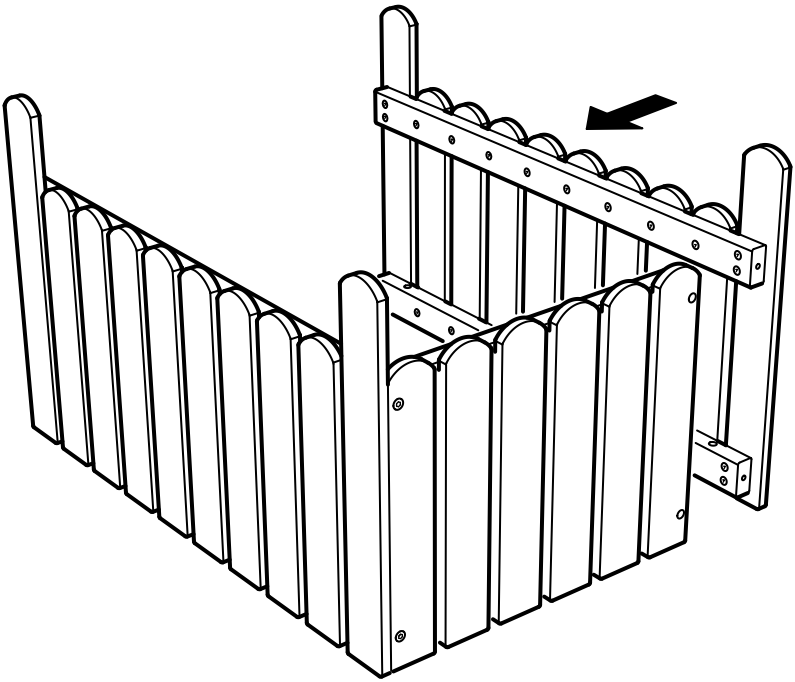

3

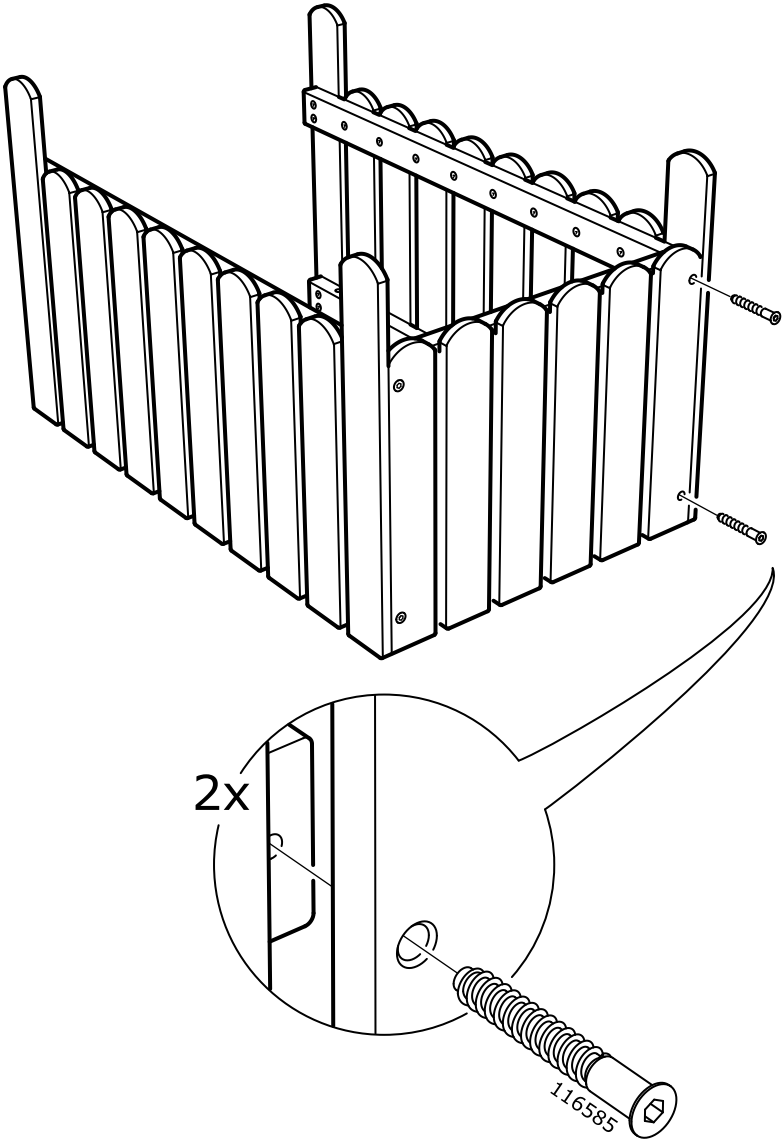

4

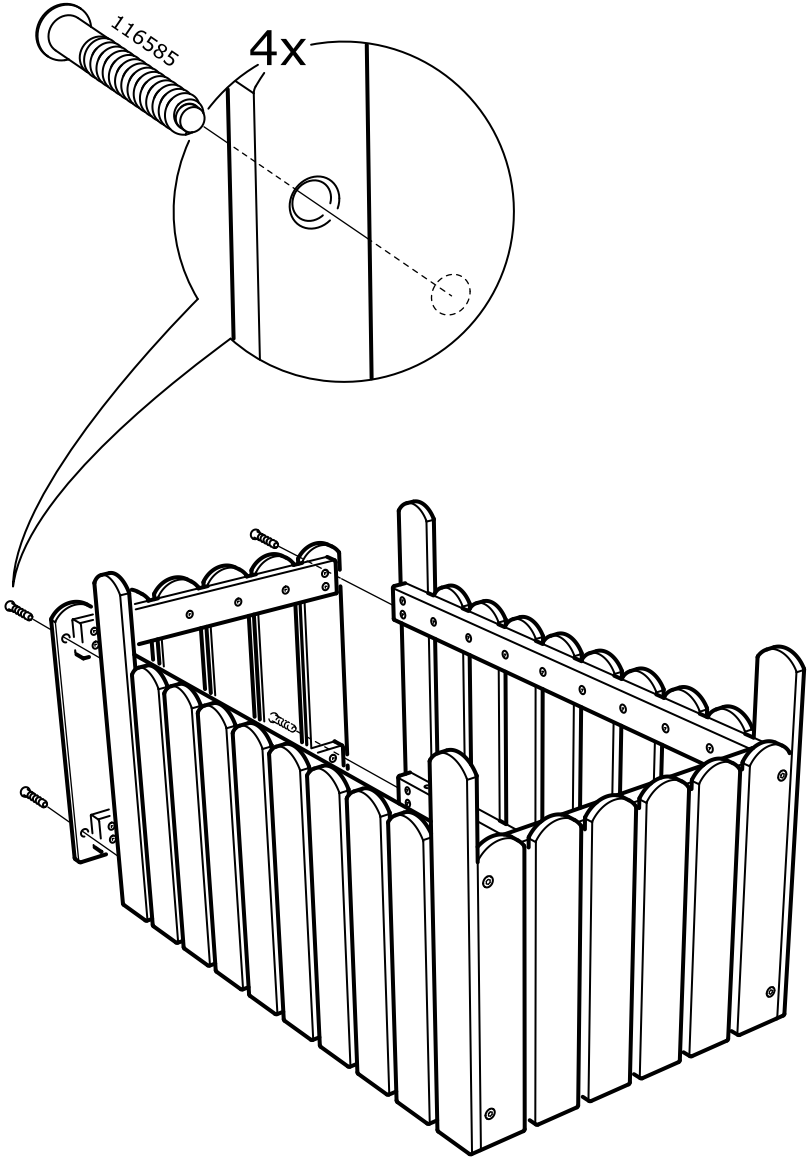

5

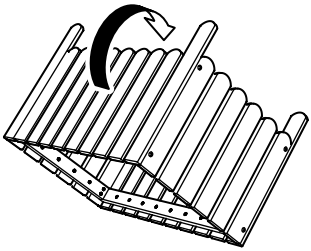

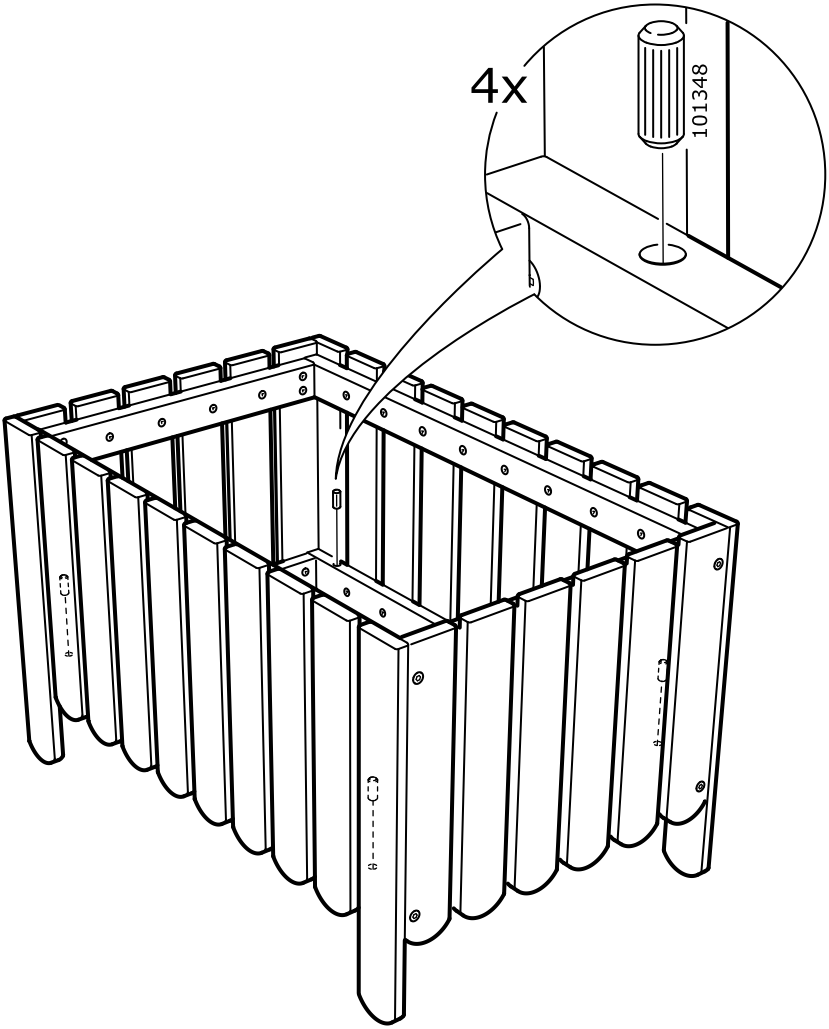

6

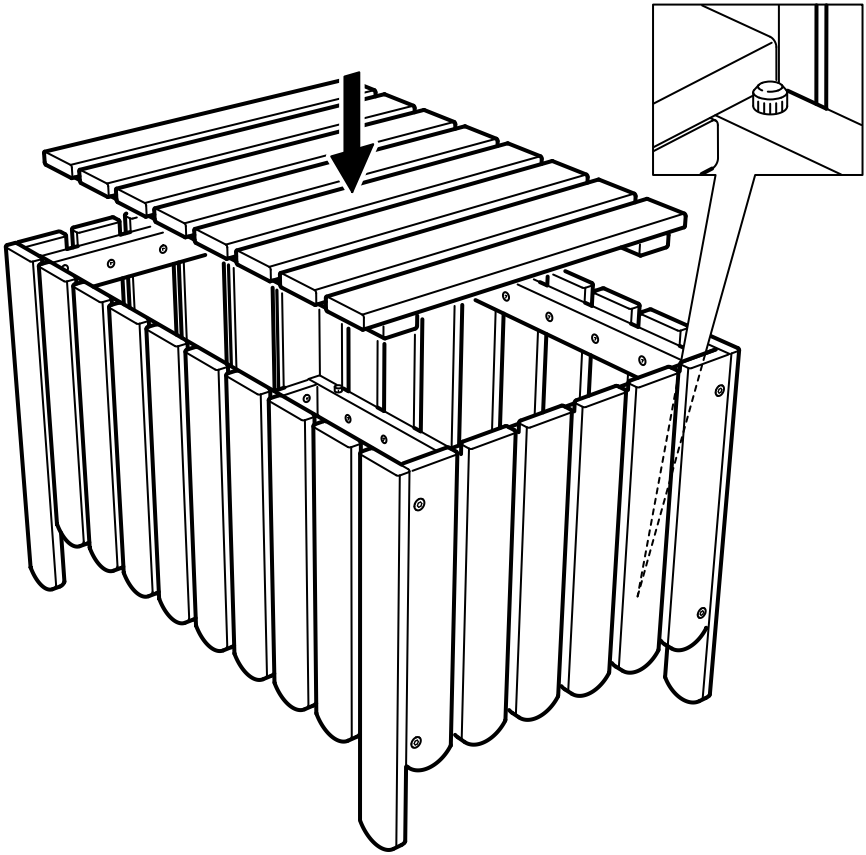

© Inter IKEA Systems B.V. 2013