# PLEJA

Design and Quality
IKEA of Sweden

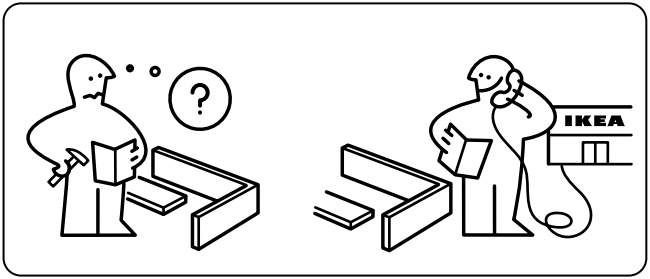


# 1

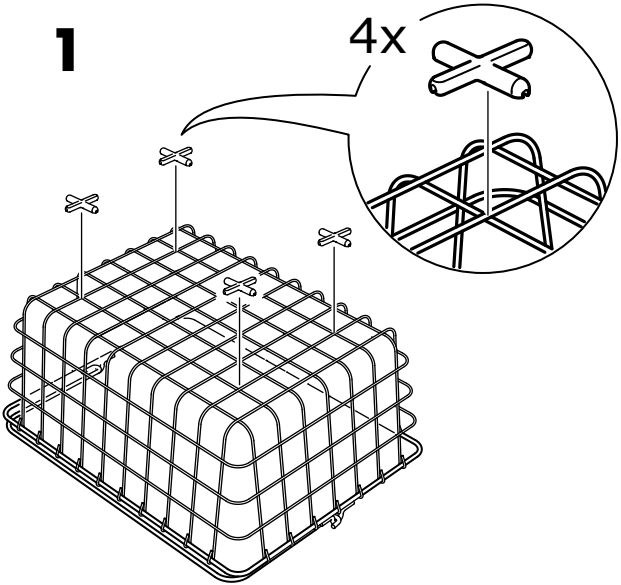

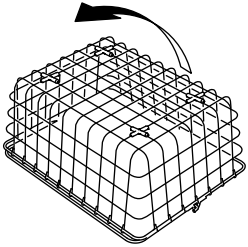

**2**

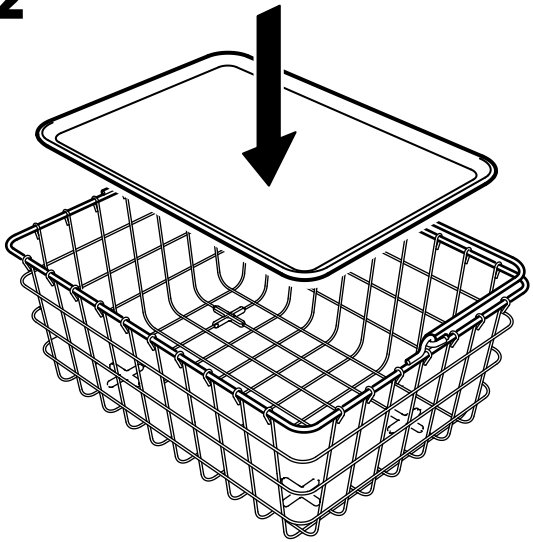

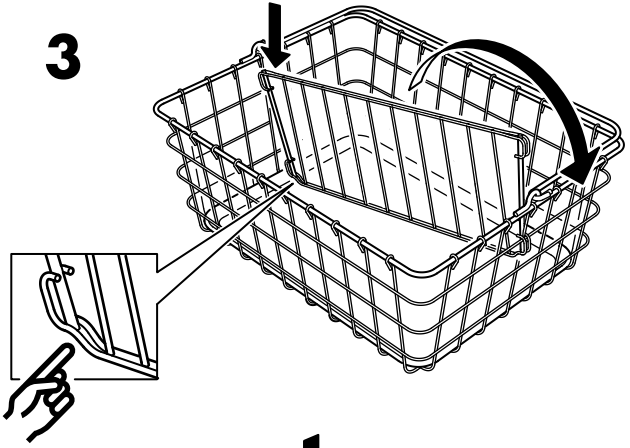


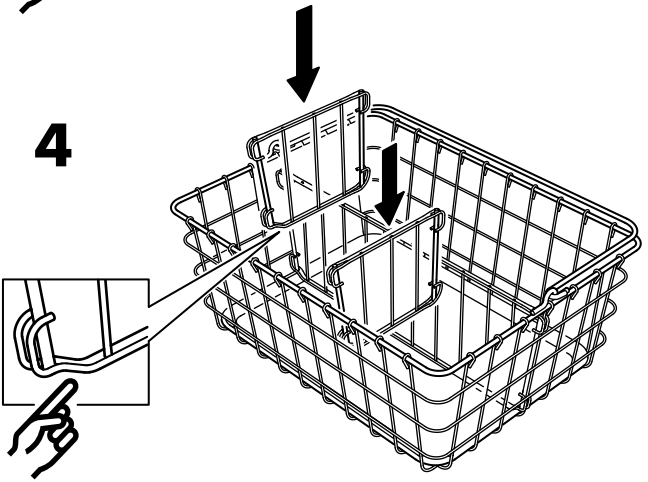



© Inter IKEA Systems B.V. 2017
2017-03-23
AA-2015991-1